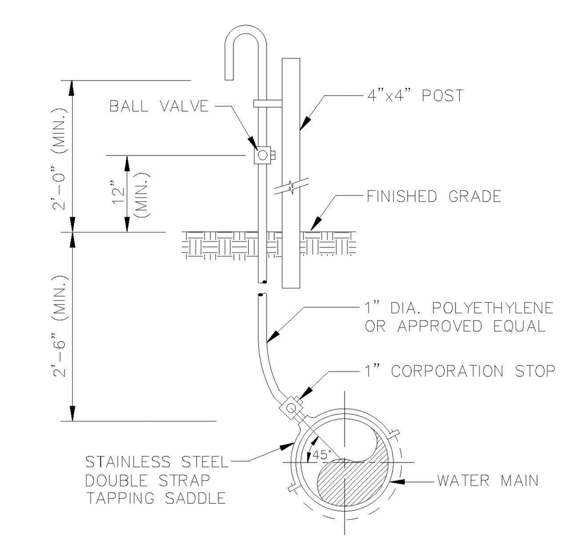


## SAMPLE POINT ( MAIN )

ALL D.I.P. TO BE PAINTED BLUE ON TOP HALF OF PIPE.

ENGINEERING STANDARDS 2022

| REVISIONS | | | |
|---|---|---|---|
| BY | DATE | ENGINEERING DIVISION CITY OF POMPANO BEACH | SAMPLE POINT (MAIN) |
| S.S. | 04-2005 | SCALE: N.T.S. | DATE: MAY 2022 DWG. NO. 100-1 |

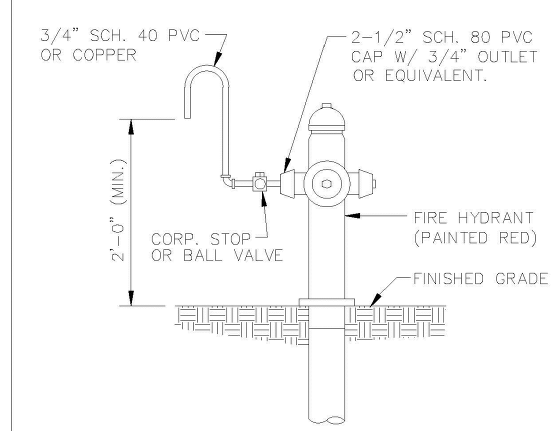


## SAMPLE POINT ( HYDRANT )

ALL POMPANO BEACH HYDRANTS SHALL BE PAINTED RED.

ALL D.I.P. TO BE PAINTED BLUE ON TOP HALF OF PIPE.

ENGINEERING STANDARDS 2022

| REVISIONS | | | |
|---|---|---|---|
| BY | DATE | ENGINEERING DIVISION CITY OF POMPANO BEACH | SAMPLE POINT (HYDRANT) |
| S.S. | 04-2005 | SCALE: N.T.S. | DATE: MAY 2022 DWG. NO. 101-1 |

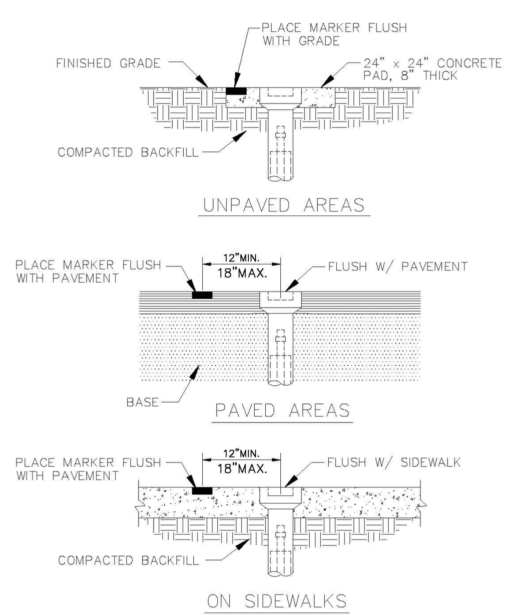


## VALVE BOX SETTINGS

ENGINEERING STANDARDS 2022

| REVISIONS | | | |
|---|---|---|---|
| BY | DATE | ENGINEERING DIVISION CITY OF POMPANO BEACH | VALVE BOX SETTINGS |
| S.S. | 04-2005 | SCALE: N.T.S. | DATE: MAY 2022 DWG. NO. 102-1 |

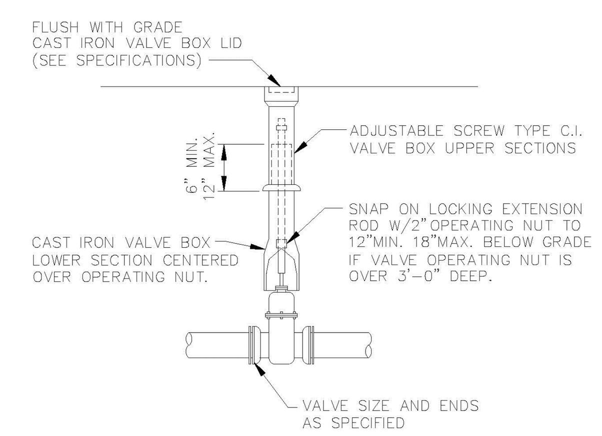


## GATE OR PLUG VALVE SETTING

USE MEGALUGS AT ALL PIPE JOINTS

ALL D.I.P. TO BE PAINTED BLUE ON TOP HALF OF PIPE.

ENGINEERING STANDARDS 2022

| REVISIONS | | | |
|---|---|---|---|
| BY | DATE | ENGINEERING DIVISION CITY OF POMPANO BEACH | GATE OR PLUG VALVE SETTINGS |
| S.S. | 04-2005 | | DATE: MAY 2022 DWG. NO. 103-1 |
| T.W. | 11-2007 | SCALE: N.T.S. | |

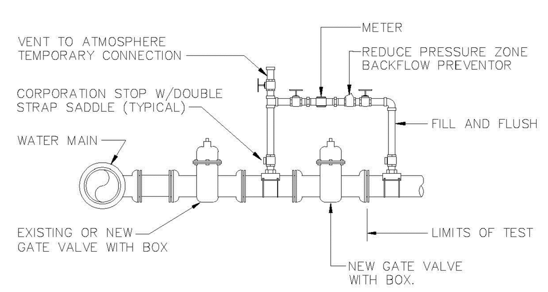


METHOD "B"

NOTES:

1. WATER MAIN TO BE PRESSURE TESTED AND DISINFECTED ACCORDING TO BROWARD COUNTY PUBLIC HEALTH UNIT REGULATIONS, AWWA, AND MUNICIPAL SPECIFICATIONS IN EFFECT.
2. BACTERIOLOGICAL TESTS ARE TO BE PERFORMED BY THE CONTRACTOR AND AN APPROVED TESTING LABORATORY.
3. REMOVE TEMPORARY CONNECTION AT SADDLE ON NEW MAINS AFTER FILLING AND FLUSHING HAS BEEN COMPLETED AND REPLACE WITH BRASS PLUG
4. PROVIDE ALL NECESSARY THRUST BLOCKS OR OTHER RESTRAINTS.
5. FILLING AND FLUSHING LOCATIONS SHALL BE COORDINATED BY THE CONTRACTOR, ENGINEER, AND CITY.
6. VENT TO ATMOSPHERE SHALL REMAIN OPEN DURING ALL PHASES OF PRESSURE TESTING.
7. AFTER COMPLETION FILL AND FLUSH CONNECTION
8. USE MEGALUGS AT ALL PIPE JOINTS

## FILLING AND FLUSHING CONNECTION

ALL D.I.P. TO BE PAINTED BLUE ON TOP HALF OF PIPE.

ENGINEERING STANDARDS 2022

| REVISIONS | | | |
|---|---|---|---|
| BY | DATE | ENGINEERING DIVISION CITY OF POMPANO BEACH | FILLING / FLUSHING CONNECTION |
| S.S. | 04-2005 | | DATE: MAY 2022 DWG. NO. 104-1 |
| T.W. | 11-2007 | | |
| S.S. | 01-2012 | SCALE: N.T.S. | |

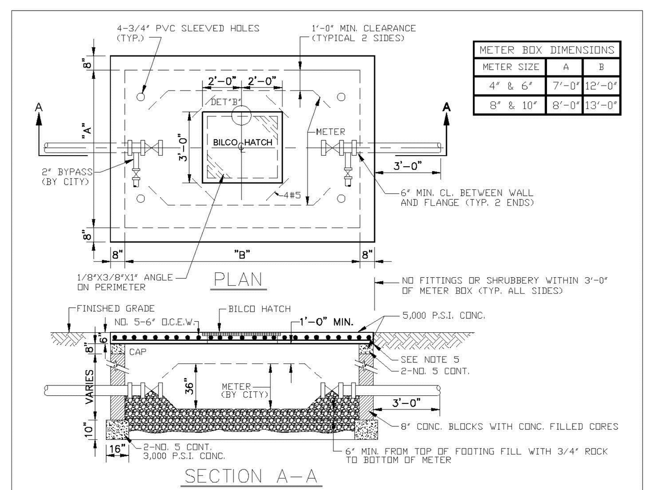


| METER BOX DIMENSIONS | | |
|---|---|---|
| METER SIZE | A | B |
| 4" & 6" | 7'-0" | 12'-0" |
| 8" & 10" | 8'-0" | 13'-0" |

NOTES

1. THIS STRUCTURE & LID ARE FOR NON-TRAFFIC BEARING ONLY.
2. DO NOT CONSTRUCT METER BOX UNTIL AFTER METER IS IN PLACE.
3. CENTER BOX AROUND METER.
4. DO NOT TIE CONCRETE LID TO CONCRETE WALLS.
5. TOP OF LID TO BE @ FINISH GRADE ELEV.
6. CUT OUT REPLACEABLE 10" SQUARE OVER EACH READING HEAD & FASTEN W/CHAIN.
7. FITS NEPTUNE R450 ANTENNA.
8. BILCO HATCH MODEL J-AL OR JD-AL OR EQUAL

## LARGE METER BOX

ENGINEERING STANDARDS 2022

| REVISIONS | | | |
|---|---|---|---|
| BY | DATE | ENGINEERING DIVISION CITY OF POMPANO BEACH | LARGE METER BOX |
| T.W. | 03-2008 | | DATE: MAY 2022 DWG. NO. 105-1 |
| S.S. | 01-2012 | | |
| S.S. | 11-2012 | SCALE: N.T.S. | |

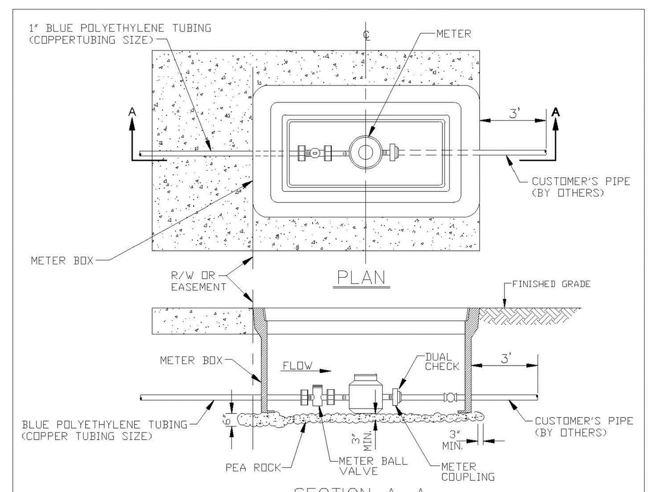


NOTES:

1. ALL METERS WILL BE SUPPLIED AND INSTALLED BY COPB UTILITIES METER HAS IRON PIPE THREAD MALE CONNECTION ON EACH END.
2. METER SHALL BE CENTERED IN BOX.
3. DUAL CHECK IS SAME SIZE AS CUSTOMER'S SERVICE LINE.

| METER SIZE | LAYING LENGTH (IN) | HEIGHT (IN) |
|---|---|---|
| 5/8" | 7.5 | 4.56 |
| 1" | 10.75 | 5.75 |

## METER BOX INSTALLATION

ENGINEERING STANDARDS 2022

| REVISIONS | | | |
|---|---|---|---|
| BY | DATE | ENGINEERING DIVISION CITY OF POMPANO BEACH | METER BOX INSTALLATION FOR 5/8" AND 1" METERS |
| S.S. | 11-2012 | SCALE: N.T.S. | DATE: JAN. 2022 DWG. NO. 105-2 |

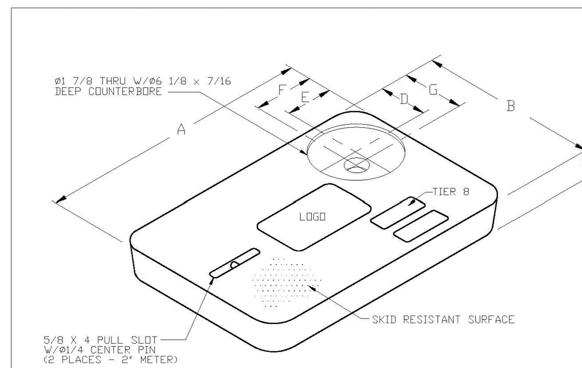


| METER BOX COVER DIMENSIONS (IN) | | | | | | | |
|---|---|---|---|---|---|---|---|
| METER SIZE | A | B | C | D | E | F | G |
| 1" | 18 1/8" | 11 1/4" | 1 3/4" | 3 3/4" | 4" | 4 9/16" | 4 5/16" |
| 1 1/2" | 23 1/4" | 13 3/4" | 2" | 4" | 4" | 4 9/16" | 4 9/16" |
| 2" | 30 1/2" | 17 1/2" | 2" | 4" | 4" | 4 9/16" | 4 9/16" |

NOTES

1. CUSTOMER IS CITY OF POMPANO BEACH FLORIDA LOGO TO BE SPECIFIED: CITY OF POMPANO BEACH POTABLE WATER
2. FITS NEPTUNE R450 ANTENNA
3. THIS COVER IS RATED FOR A STATIC DESIGN LOAD OF 8,000 LBS. (35,548 N) OVER A 10 (254) X 10 (254) AREA AND MUST PASS A MINIMUM STATIC TEST LOAD OF 12,000 LBS (53,376 N).
4. METER BOX COVER SHOULD BE RATED FOR TRAFFIC CONDITION AS DETERMINED BE ENGINEER OF RECORD.

## POTABLE WATER METER BOX COVER

ENGINEERING STANDARDS 2022

| REVISIONS | | | |
|---|---|---|---|
| BY | DATE | ENGINEERING DIVISION CITY OF POMPANO BEACH | TYPICAL METER BOX COVER |
| S.S. | 11-2012 | SCALE: N.T.S. | DATE: JAN. 2022 DWG. NO. 105-3 |

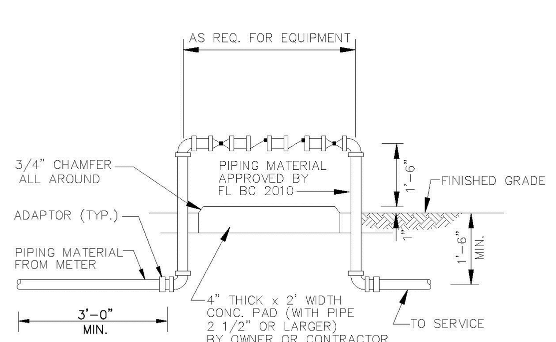


## BACKFLOW PREVENTER

USE MEGALUGS AT ALL PIPE JOINTS 3" AND LARGER
PLEASE SEE METER INSTALL DIMENSION LIST ON STANDARD NO. 106-4
SMALL UNITS UNI-STRUT SUPPORT

ENGINEERING STANDARDS 2022

| REVISIONS | | | |
|---|---|---|---|
| BY | DATE | ENGINEERING DIVISION CITY OF POMPANO BEACH | BACKFLOW PREVENTER |
| T.W. | 04-2008 | | DATE: MAY 2022 DWG. NO. 106-1 |
| S.S. | 03-2009 | | |
| S.S. | 11-2012 | | |
| S.S. | 01-2013 | SCALE: N.T.S. | |

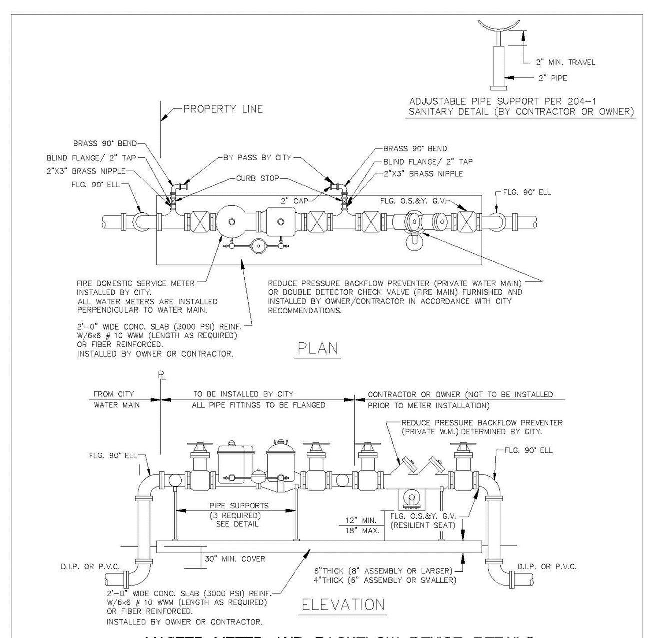


MASTER METER AND BACKFLOW DEVICE DETAILS
FIRE AND DOMESTIC COMBINED SOURCE

NOTES

1. THE BACKFLOW PREVENTOR FOR THE BY-PASS SHALL BE DDCV OR RPZ.
2. PLEASE NOTE THAT WATER METERS 3" AND LARGER ARE SUBJECT TO AN APPROXIMATE ORDER LEAD TIME OF 60 TO 75 DAYS AFTER FULL PAYMENT. PLEASE CONTACT CUSTOMER SERVICE AT 954-786-4637 TO ARRANGE FOR METER PROCUREMENT AND INSTALLATION.
3. USE MEGALUGS AT ALL PIPE JOINTS
4. PLEASE SEE METER INSTALL DIMENSION LIST ON STANDARD NO. 106-4

ENGINEERING STANDARDS 2022

| REVISIONS | | | |
|---|---|---|---|
| BY | DATE | ENGINEERING DIVISION CITY OF POMPANO BEACH | MASTER METER AND BACKFLOW DEVICE |
| S.S. | 05-2011 | | DATE: MAY 2022 DWG. NO. 106-2 |
| S.S. | 11-2012 | | |
| S.S. | 12-2013 | | |
| S.S. | 11-2016 | SCALE: N.T.S. | |

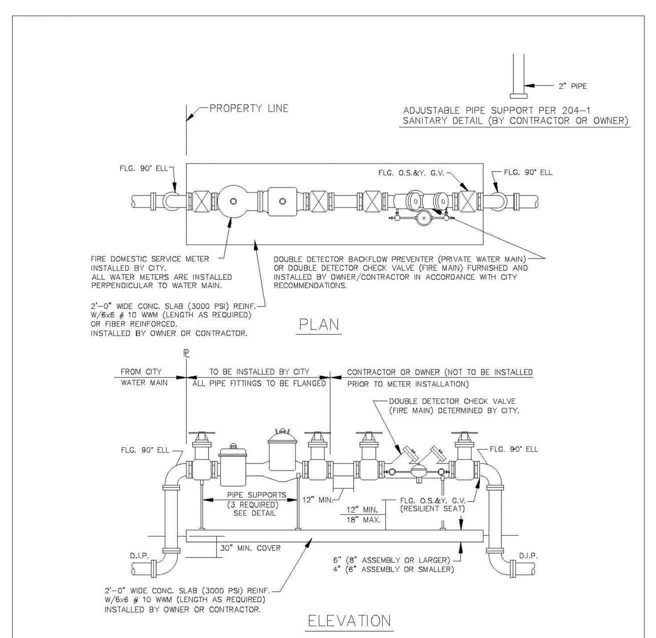


FIRE ONLY METER AND BACKFLOW DEVICE DETAILS

NOTES

1. THE BACKFLOW PREVENTOR FOR THE BY-PASS SHALL BE DDCV OR RPZ.
2. PLEASE NOTE THAT WATER METERS 3" AND LARGER ARE SUBJECT TO AN APPROXIMATE ORDER LEAD TIME OF 60 TO 75 DAYS AFTER FULL PAYMENT. PLEASE CONTACT CUSTOMER SERVICE AT 954-786-4637 TO ARRANGE FOR METER PROCUREMENT AND INSTALLATION.
3. USE MEGALUGS AT ALL PIPE JOINTS
4. PLEASE SEE METER INSTALL DIMENSION LIST ON STANDARD NO. 106-4

ENGINEERING STANDARDS 2022

| REVISIONS | | | |
|---|---|---|---|
| BY | DATE | ENGINEERING DIVISION CITY OF POMPANO BEACH | FIRE ONLY METER AND BACKFLOW DEVICE |
| S.S. | 05-2011 | | DATE: MAY 2022 DWG. NO. 106-3 |
| S.S. | 11-2012 | | |
| S.S. | 12-2013 | | |
| S.S. | 11-2016 | SCALE: N.T.S. | |

| FIRE METERS - OS & Y VALVES, GASKETS & METER | | | | |
|---|---|---|---|---|
| (NEPTUNE MACH 10 Ultrasonic Meter) | | | | |
| SIZE | VALVES (2) | GASKETS (4) | METER w/ Strainer | TOTAL LENGTH |
| 3" w/ 4" X 3" Reducer ** | 16" | 1/2" | 30" ** | 46 1/2" |
| 4" | 18" | 1/2" | 27 1/2" | 46" |
| 6" | 21" | 1/2" | 33" | 54 1/2" |
| 8" | 23" | 1/2" | 30" | 53 1/2" |
| 10" | 26" | 1/2" | 41" | 67 1/2" |

| FIRE &/or Domestic Water SERVICE METERS - TEES, OS & Y VALVES, GASKETS & METERS | | | | | |
|---|---|---|---|---|---|
| (NEPTUNE MACH 10 Ultrasonic Meter) | | | | Meter w/ | TOTAL |
| SIZE | TEES (2) | VALVES (2) | GASKETS (6) | Strainer | LENGTH |
| 3" w/ 4" X 3" Reducer ** | 3" X 3" - 22" | 16" | 3/4" | 30" ** | 68 3/4" |
| 4" | 4" X 3" - 26" | 18" | 3/4" | 27 1/2" | 72 1/4" |
| 6" | 6" X 4" - 32" | 21" | 3/4" | 33" | 86 3/4" |
| 8" | 8" X 4" - 36" | 23" | 3/4" | 30" | 89 3/4" |
| 10" | 10" X 6" - 44" | 26" | 3/4" | 41" | 111 3/4" |

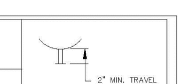


*All fittings, valves and meters are flanged & all dimensions are from face of flange to face of flange.

NOTE:
PLEASE NOTE THAT WATER METERS 3" AND LARGER ARE SUBJECT TO AN APPROXIMATE ORDER LEAD TIME OF 60 TO 75 BUSINESS DAYS AFTER FULL PAYMENT. PLEASE CONTACT CUSTOMER SERVICE AT 954-786-4637 TO ARRANGE FOR METER PROCUREMENT AND INSTALLATION. LARGE METERS MUST BE AT MINIMUM ORDERED PRIOR TO INITIAL INSPECTIONS.

ENGINEERING STANDARDS 2022

| REVISIONS | | | |
|---|---|---|---|
| BY | DATE | ENGINEERING DIVISION CITY OF POMPANO BEACH | METER INSTALL DIMENSION LIST |
| T.W. | 02-2008 | | DATE: JAN. 2022 DWG. NO. 106-4 |
| S.S. | 11-2016 | | |
| A.S. | 01-2022 | SCALE: N.T.S. | |

REVISIONS:
1.
2.
3.
4.
5.
6.
7.
8.

CLIENT:
**LLR ARCHITECTS, INC.**
**9000 SHERIDAN STREET**
**SUITE 158**
**PEMRBOKE PINES, FL, 33024**

PROJECT:
**REGANZANI TOWNHOMES**
**POMPANO BEACH FLORIDA**

TASK:
**CONSTRUCTION DETAILS**

GGB Engineering
CIVIL AND FORENSIC ENGINEERS • LAND PLANNERS • CONSTRUCTION MANAGERS
FLORIDA REGISTRATION No. 38256
2699 Stirling Road, Suite C-202 Fax: (954) 986-6655
Fort Lauderdale, Florida 33312 Phone: (954) 986-9899

| DATE: | SCALE: |
|---|---|
| JUNE, 2025 | N.T.S. |
| DESIGNED BY: | DRAWN BY: |
| B.J.R. | A.R. |
| PROJECT NO. | |
| 25-0386 | |
| SHEET | |
| C-005 | |

BRIAN J. ROSE LICENSE No. 71549 STATE OF FLORIDA PROFESSIONAL ENGINEER

This document has been digitally signed and sealed by Brian J. Rose, P.E. on the date adjacent to the seal. Printed copies of this document are not considered signed and sealed and the signature must be verified on any electronic copies.

Brian Rose
Digitally signed by Brian Rose
DN: CN=Brian Rose, dnQualifier=A01410C00000196FE57CC790000CE52, O=Rose Consulting Advisors Inc., C=US
Reason: I am approving this document
Date: 2025.06.30 10:53:14-04'00'

DRC

PZ24-12000021

08/06/2025